Hanover Outdoor Furniture

IMPORTANT

If you have any problems with this product (missing or damaged parts, assembly issues, etc.),

PLEASE DO NOT RETURN TO THE RETAILER/STORE

from where you purchased the product.

Please call our Toll-Free Customer Service Hotline at: **1-866-988-3300**

Between 9:00 AM and 5:00 PM Eastern Time, Monday through Friday

Or visit our website at: **www.hanover-products.com**

To expedite any future warranty claims, please retain the Instruction Sheet, Warranty Card and receipt for future use.

For additional on-line support on assembly, troubleshooting and care & maintenance of your outdoor furniture, please visit our website at: **www.hanover-products.com**.

Assembly Instructions

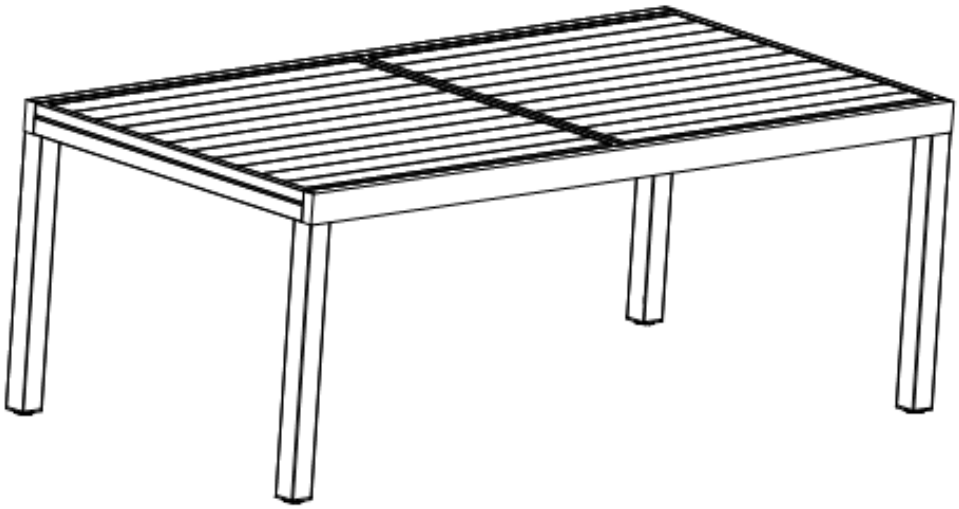

Aluminum Extension Table

Questions, problems, or missing parts?
Before returning to the store, call Customer Service.

1-866-988-3300
8 a.m. -5 p.m., PST Monday - Friday

Retain this manual for future use.

Parts & Tools

PART	QTY	PICTURE & DESCRIPTION
A	1	Table Top
B	4	Table Leg
C	4	Leg Support

PART	QTY	PICTURE & DESCRIPTION
AA	8	M10 Flat Washer
BB	8	Plain Washer
CC	8	Screw Nut
DD	4	Leg Cap
EE	1	Socket Wrench

WARNING: To avoid damage of your new patio furniture, please use either the carton or another soft surface such as carpet as a working surface to prevent product damage during assembly.

Table Assembly

Step 1:

- Insert the screw nuts (CC) into the 4 leg supports (C).

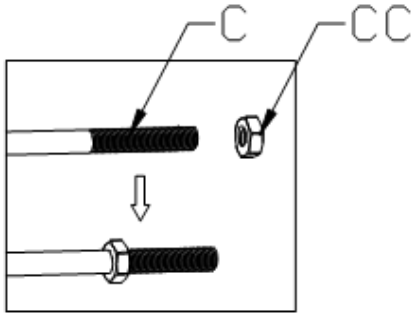

Step 2:

- Place the table top (A) upside down on a soft surface. Insert the leg support (C), M10 flat washer (AA) and a plain washer (BB) into the holes through the table top (A).
- Tighten with the socket wrench (EE).
- Repeat for the other three leg supports (C).

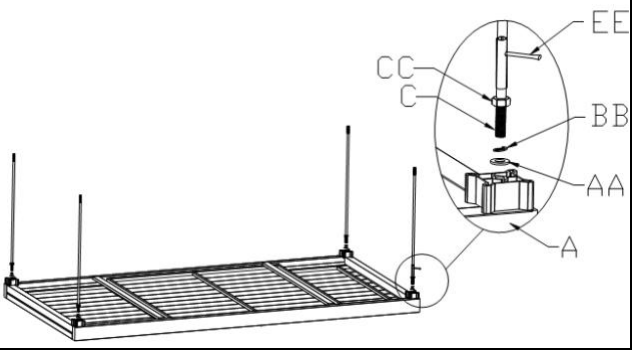

Step 3:

- Insert the table legs (B) into the table top (A).
- Insert the M10 flat washer (AA), plain washer (BB) and screw nut (CC) into the holes using the socket wrench (EE).

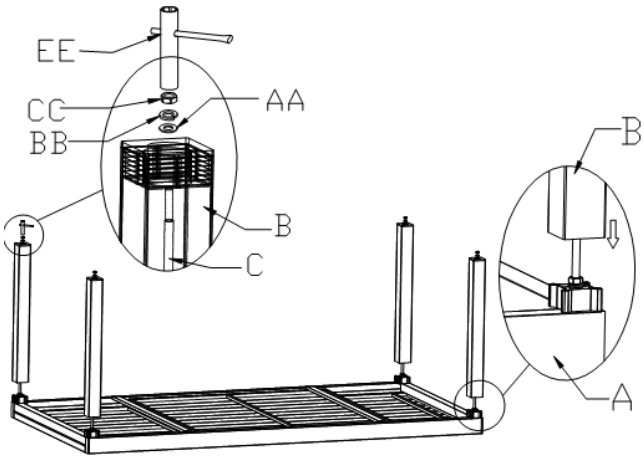

Table Assembly

Step 4:

- Insert the leg caps (BB) into the holes on the table legs (B). Hand tighten the leg caps (BB).

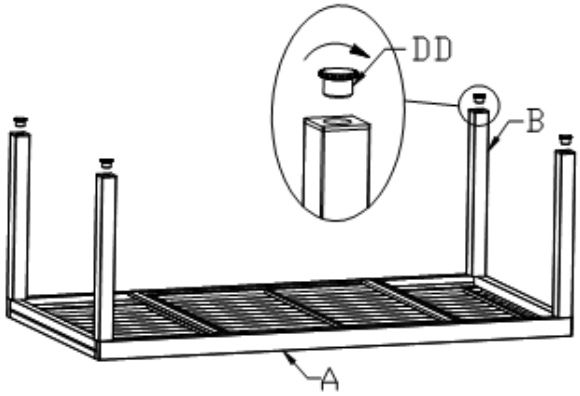

Step 5:

- Turn the table right side up.

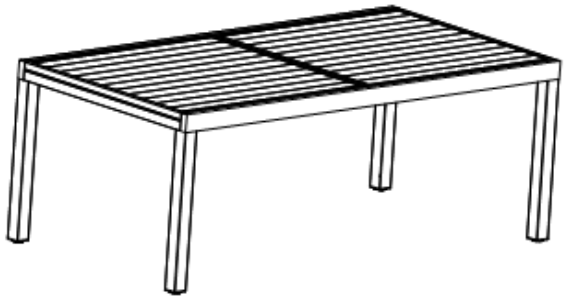

Opening Table

Step 1:

- Open the lock catch counter -clockwise under table top (A) as shown.

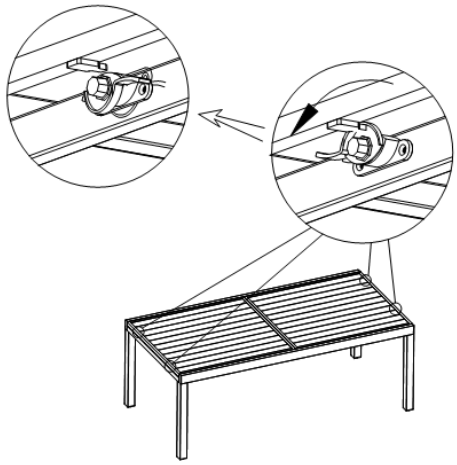

Step 2:

- Push the table top open from both sides.

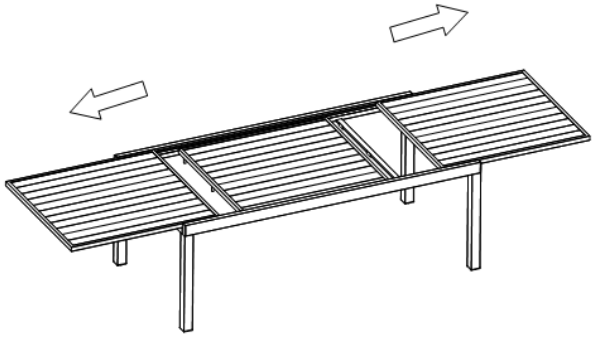

Step 3:

- Push the middle of table top to lift it up.

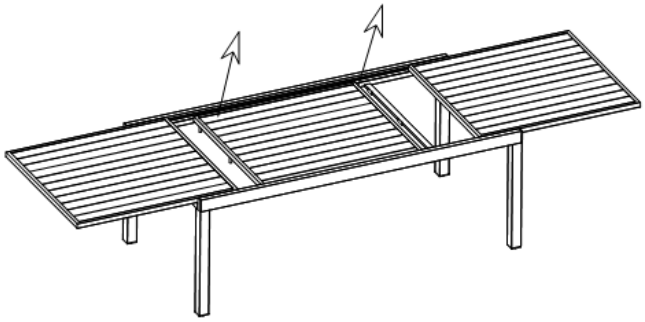

Opening Table

Step 4:

- Push the middle of table top to right side till it is on supporting tube.

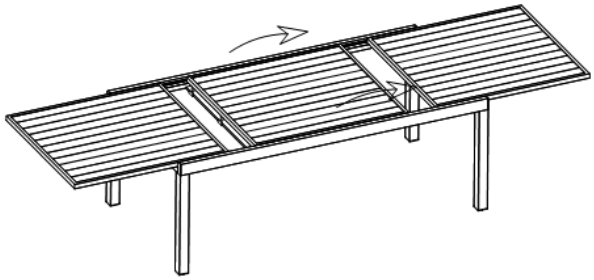

Step 5:

- Push right and left sides of the table top to middle table top segment.

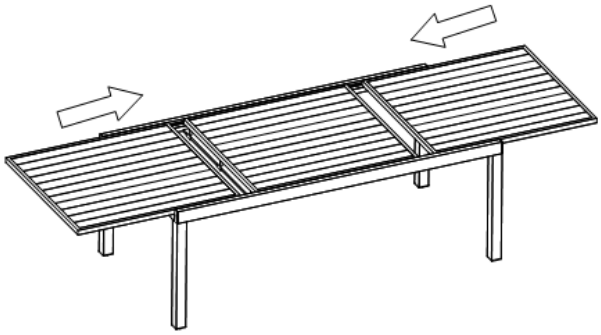

Step 6:

- Open the lock catch clockwise under table top (A) as shown.

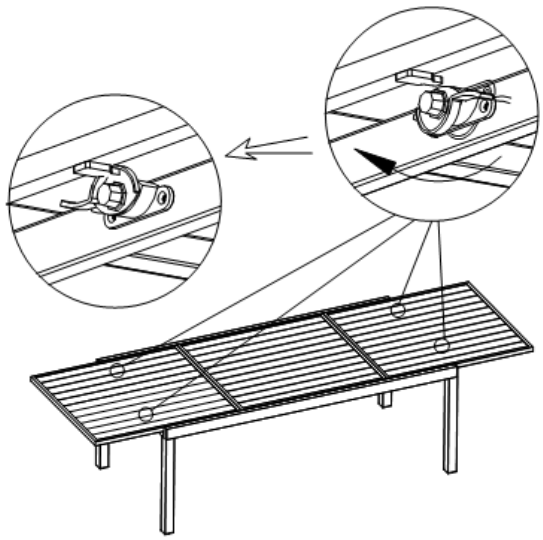

Closing Table

Step 1:

- Open the lock catch counter-clockwise under table top (A) as shown.

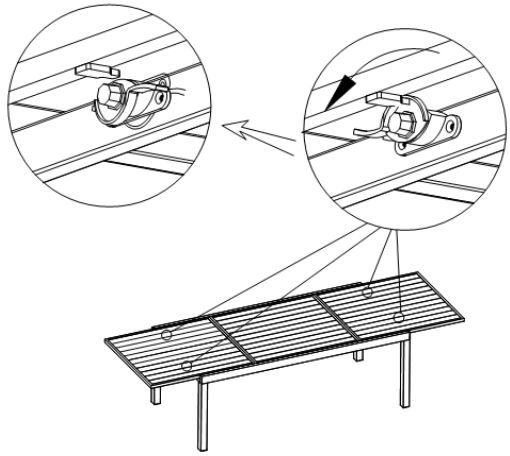

Step 2:

- Push the table top open from both sides.

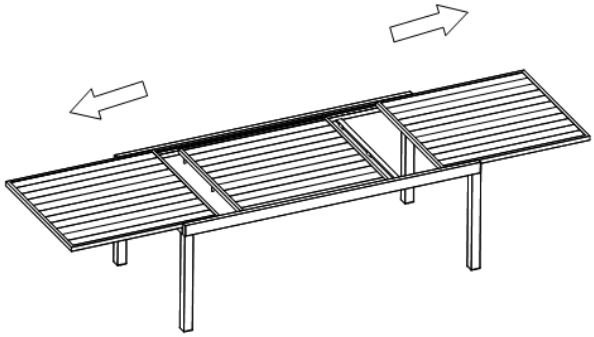

Step 3:

- Push the middle of table top to lift it up.

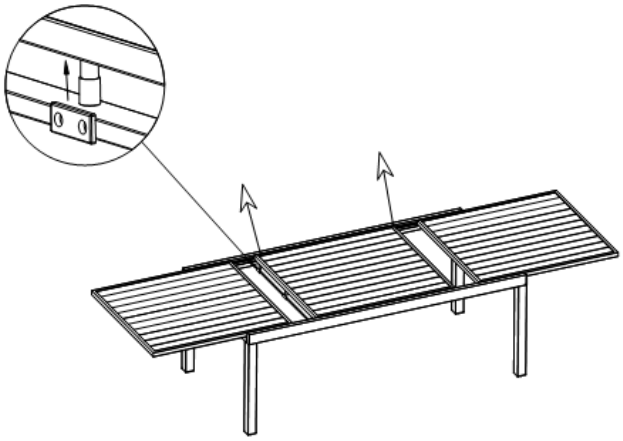

Closing Table

Step 4:

- Push the middle table top to lower left corner until it's on middle supporting tube.

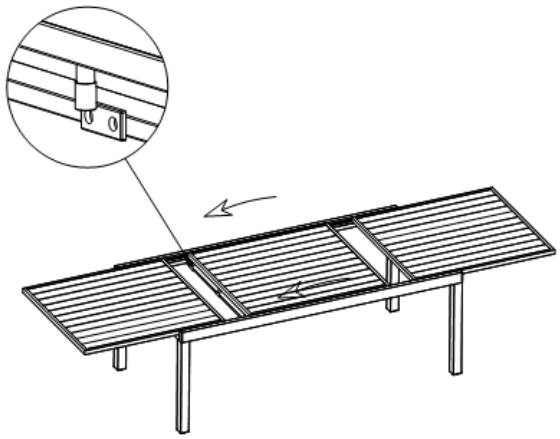

Step 5:

- Push the right and left table top segments to middle table top segment.

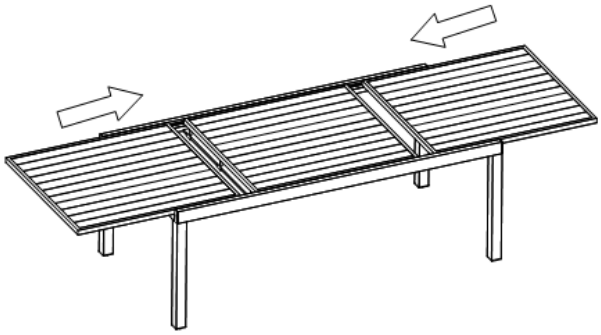

Step 6:

- Open the lock catch clockwise under table top (A) as shown.

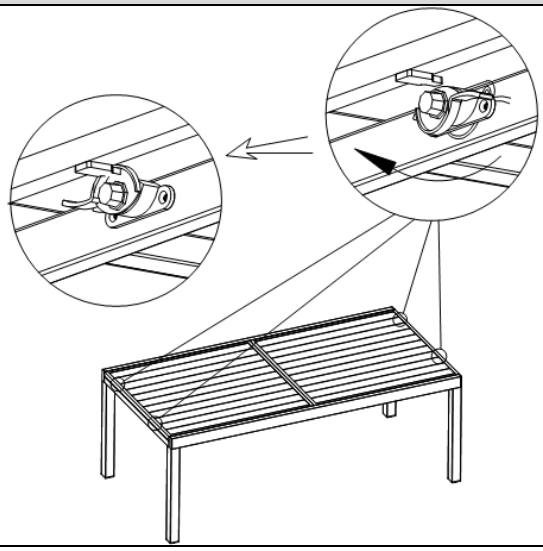

Outdoor Furniture

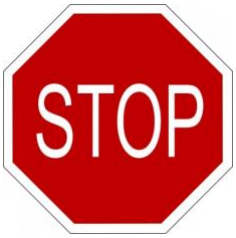

IMPORTANT

If you have any problems with this product (missing or damaged parts, assembly issues, etc.),

PLEASE DO NOT RETURN TO THE RETAILER/STORE

from where you purchased the product.

Please call our Toll-Free Customer Service Hotline at: **1-866-988-3300**

Between 8:00 AM and 5:00 PM Pacific Standard Time, Monday through Friday

To expedite any future warranty claims, please retain the instruction sheet, warranty card and receipt for future use.

Care and Maintenance

Store furniture in an upright position. Be careful to never allow water to build up in frames as this will cause corrosion and freeze damage in cold climates. Wash all frames with a solution of mild soap and water. Rinse with clean water and dry with a soft absorbent cloth towel. Frames can be treated with a liquid wax for maximum protection against UV rays and/or salty, damp air. If your set includes cushions, slings, and/or an umbrella they may be cleaned by hand with a solution of soap and water with a clean water rinse. (Never machine wash cushions, slings or umbrella covers as this will result in shrinkage or damage). After cleaning cushions tip on end and allow to drip dry. (Never use a commercial or home dryer to tumble dry fabric goods). Do not use bleach or solvents to clean any product! This will void the warranty.

Outdoor Furniture

1-Year Limited Warranty Program

For a period of one (1) year after date of purchase, the Manufacturer will either repair or replace defective components in accordance with this Limited Warranty. This warranty is between the Manufacturer and the original purchaser and is valid only when accompanied by the original purchaser's sales receipt showing original date of purchase and location of purchase. Replacements under this warranty revert back to the date of original purchase for future warranty.

The Manufacturer or its authorized dealer can accept or reject warranty claims based on its findings. This warranty applies in normal residential use only and is not intended for commercial use. The Manufacturer can make substitutions as required of materials, components, and sub-components of comparable value and utility. This warranty is limited to product repair or replacement (to be determined solely by the Manufacturer). Warranty return is limited to only the single affected component.

This limited warranty covers only manufacturing defects and does not cover normal wear and tear, damage due to acts of nature (such as, but not limited to freezing or high winds), abuse or misuse, including chemical damage from suntan oil or other chemicals, exposure to extreme heat or cold, abrasion or excessive weight. This product is intended to be used in standard installations only. This warranty is void if the product is not used for its intended purpose. The Manufacturer disclaims liability for any aspect of installation and any inconvenience caused by a defective part of a component.

Certain items are not covered by this warranty. These include, but are not limited to the following:

1. Components subjected to abuse, including abuse intended to simulate failure.
2. Damages caused by retailer, shipper or installation crew (such as scratches, dents, tears, chips, etc.).
3. Any part which merely exhibits normal wear yet functions essentially as new, including chips, scratches or stretching of materials and stitching.
4. Tears, punctures, scratches or any damage caused by improper installation or use.
5. Damage to frames/welds resulting from improper assembly or exposure to water and/or sub-freezing temperatures is not covered. General frame rusting is not covered.
6. Fading and/or discoloration of fabrics/cushions/straps/wicker resulting from exposure to the elements, chemicals, oils, fluids or any other cause are not covered.
7. Umbrella bases are not covered under any circumstances.
8. Items sold "as is" or floor models.

To make a claim, call the toll-free number below. Please have available a copy of the original sales receipt along with a brief description of the problem. Please also provide your email address and daytime telephone or cell phone number. All items may be charged actual freight costs plus $15 for handling. Repairs or replacement will be made at the Manufacturer's option. ***Sales and use taxes, plus shipping and handling charges are the responsibility of the consumer.***

THIS IS THE ENTIRE EXCLUSIVE EXPRESS LIMITED LIABILITY. THE MANUFACTURER NEITHER MAKES NOR IS RESPONSIBLE FOR ANY OTHER WARRANTIES, EITHER EXPRESS OR IMPLIED, INCLUDING THOSE OF RETAILING DEALERS. THIS EXCLUSIVE REMEDY IS LIMITED TO RECEIPT OF A CREDIT IN CONNECTION WITH THE REPAIR OR REPLACEMENT OF ANY PRODUCT OR COMPONENT DEEMED TO BE DEFECTIVE UNDER THE TERMS AND CONDITIONS AS STATED IN THIS WARRANTY. NEITHER THE PRODUCT MANUFACTURER NOR ITS AGENTS SHALL BE LIABLE IN ANY CASE FOR INCIDENTAL, INDIRECT, SPECIAL OR CONSEQUENTIAL DAMAGES RESULTING FROM THE USE OF THIS PRODUCT OR ARISING OUT OF ANY BREACH OF THIS WARRANTY OR NEGLIGENCE EVEN IF IT HAS BEEN ADVISED OF THE POSSIBILITY OF SUCH DAMAGES. EXCEPT AS OTHERWISE MAY BE REQUIRED BY LAW, THERE ARE NO OTHER EXPRESS OR IMPLIED WARRANTIES OTHER THAN THE WARRANTY DESCRIBED HEREIN, AND ALL OTHER WARRANTIES, INCLUDING ANY IMPLIED WARRANTY OF MERCHANTABILITY OR FITNESS FOR A PARTICULAR PURPOSE ARE EXPRESSLY DISCLAIMED.

Contact Customer Service at 1-866-988-3300