HANOVER®

Assembly & Care Guide
For Motorized Gaming Desk

Model: HGD0504-***

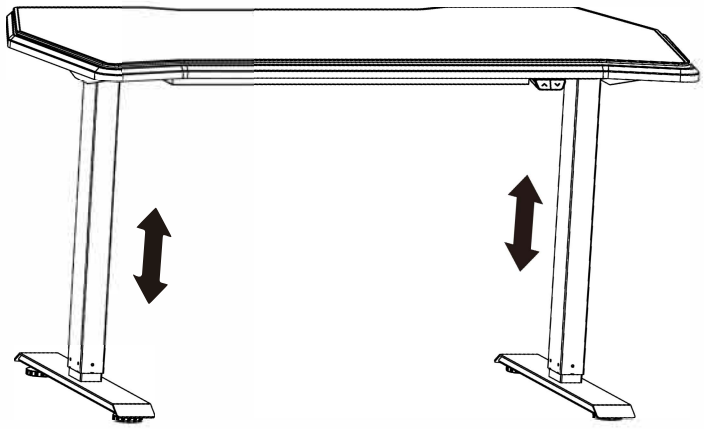

Gaming Desk Assembly Instructions

The model number of your desk is printed on the side of your carton.

Always use this number to identify your desk.

Thank you for your purchase of this quality furniture. With proper use and care, your desk will provide you with years of use. Please follow the instructions on how to assemble and disassemble your desk. If you should have any problems with your desk DO NOT return it to the place of purchase. Please refer to the trouble shooting section of this manual or call our toll free number: **877-397-5144** and a customer service representative will assist you.

Your Packages Includes:

1 Tabletop, 2 Lifting Columns, 2 Feet, 1 Supporting Beam and Plate, 1 Hand Switch, & Hardware

Please read all instructions completely before assembling your desk.

Technical Specifications:

Column Number	2
Maximum Load	154.3lbs
Max Speed	1 inch/s
Input Voltage	100-240V
Lowest Position	28.0"
Highest Position	47.6"
Desktop Size	39.4"-63.0" 19.7"-31.5"
Duty Cycle	Continuous operation for 2 mins at most after pause for 18 mins
Applicable Temperature	32~104°F

Table of Contents

Safety Information

Parts Lists and Breakdowns

Installing the Pedestal

Installing the Supporting Beam

Installing the Transmission Rod

Installing the Supporting Plate

Installing the Power Adaptor and Desktop

Installing the baffle and Power Supply

Connecting all Cables to the Adaptor

Using the Hand Switch

Trouble Shooting

Warranty

Safety Information

- Power Supply: AC100V-240V, 50/60HZ.
- Check carefully to ensure correct and complete assembly before using.
- Be familiar with all functions and program settings before first use.
- Unplug the power supply before cleaning.
- Dust the surface with a dry cloth.
- Slight noise caused by the V-ribbed belt or brake system due to structure will not have any effect on the use of the equipment.
- Keep children away from motorized height adjustable desks, control units, and handsets to avoid risk of injury and electric shock.
- Keep all electrical components away from liquids.
- Do not sit or stand on the desk frame.
- Do not crawl or lie under the desk frame.
- Do not place any objects taller than 20” underneath the desk.
- Do not open any of the components; legs, control box, or switch box, to avoid the risk of injury or electric shock.
- In the event of a power outage or if the power cord is unplugged, a manual reset may be necessary. See reset procedure in troubleshooting section.
- This motorized adjustable desk has electric motors and is designed for use in dry areas only.
- The desk height is adjustable so that it can be positioned at the most ergonomically suitable height.
- Any other use is at user’s risk.

Parts List

Tools Required:

(2) Allen Key Wrenches and (1) Standard Wrench (included)

Hardware Included:

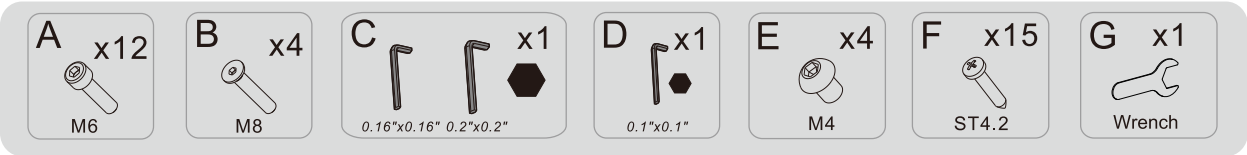

Parts List:

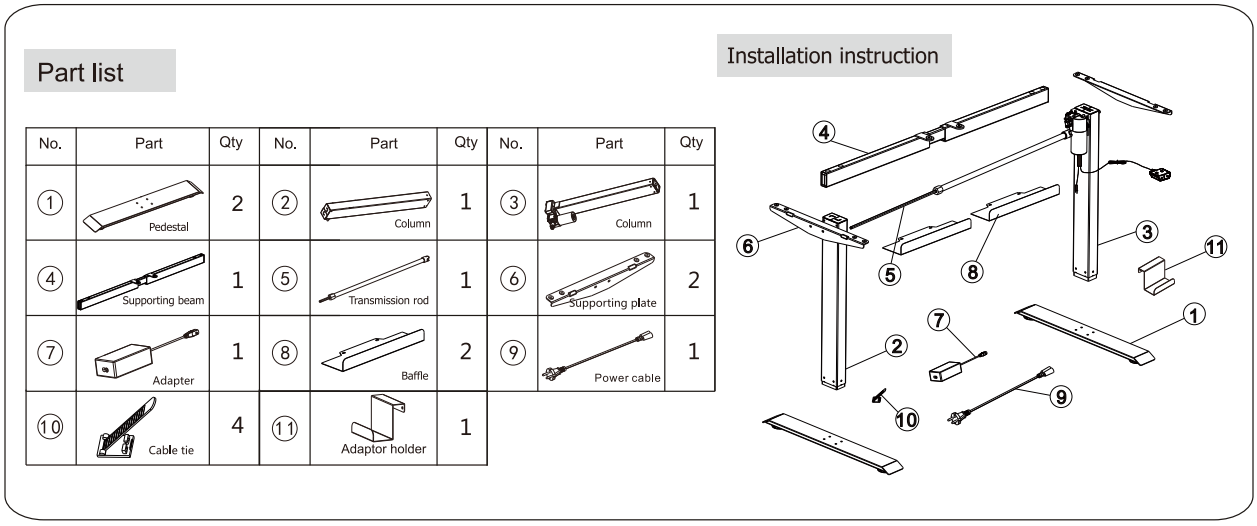

Assembly Instructions

Step 1: Installing the Pedestal

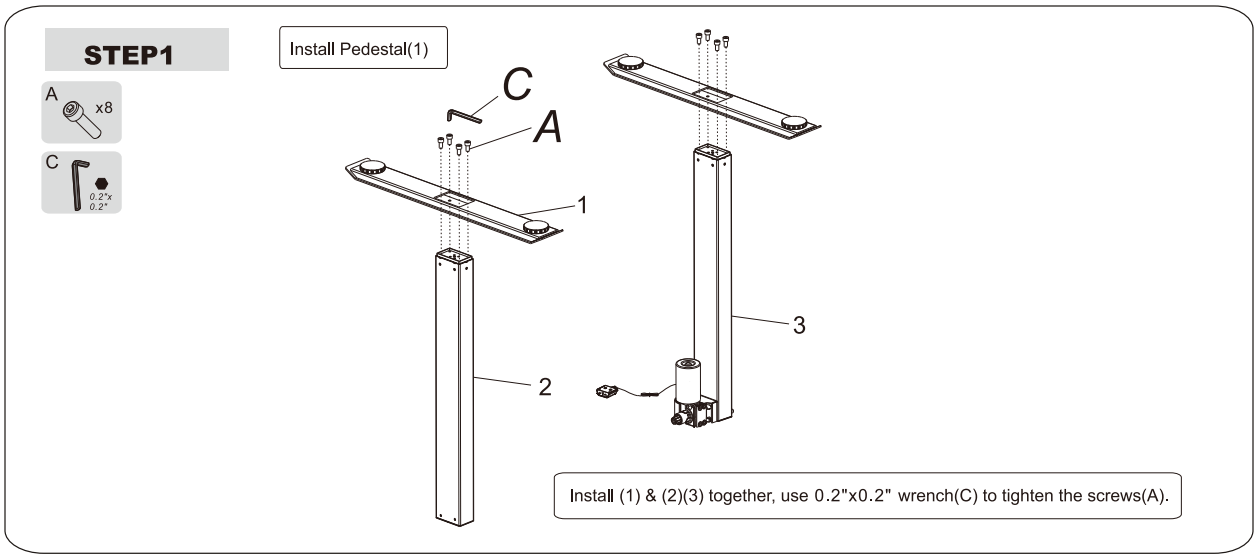

Step 2: Installing the Supporting Beam

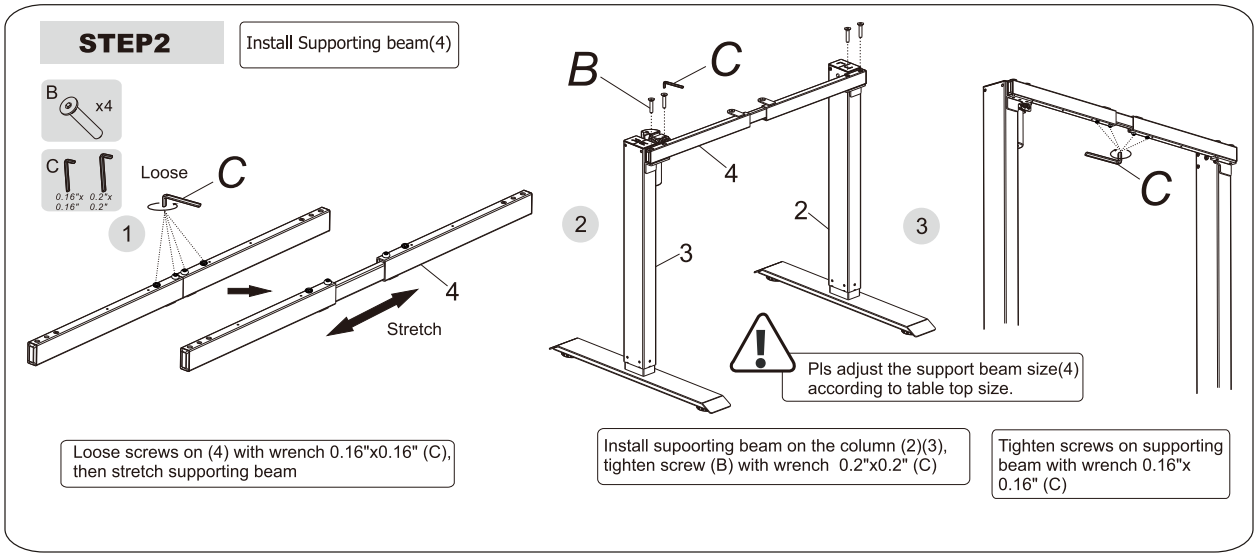

Step 3: Installing the Transmission Rod

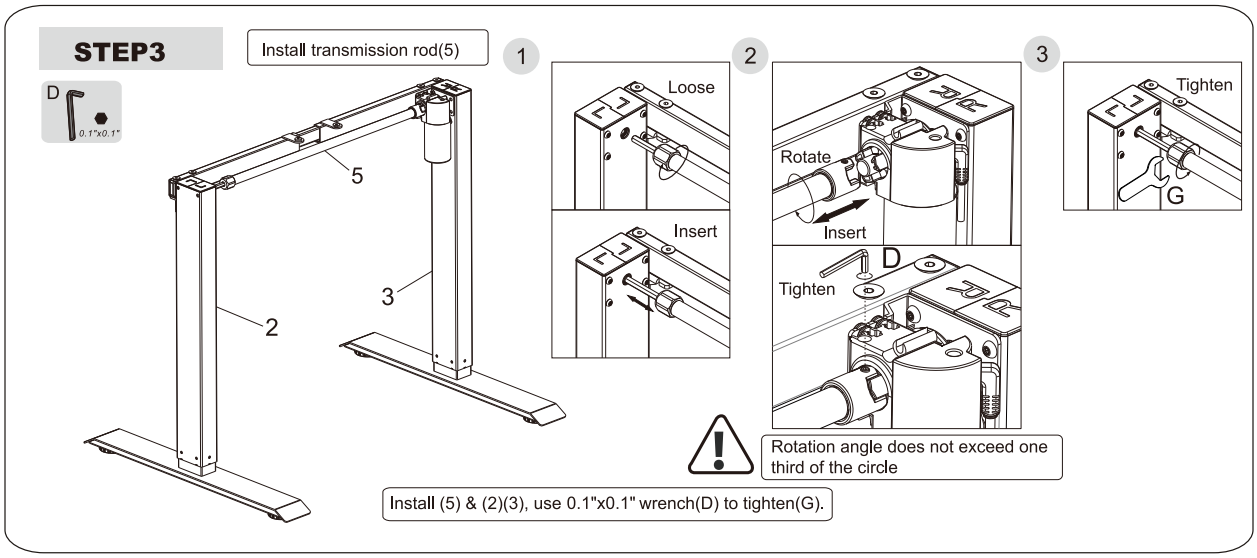

Step 4: Installing the Supporting Plate

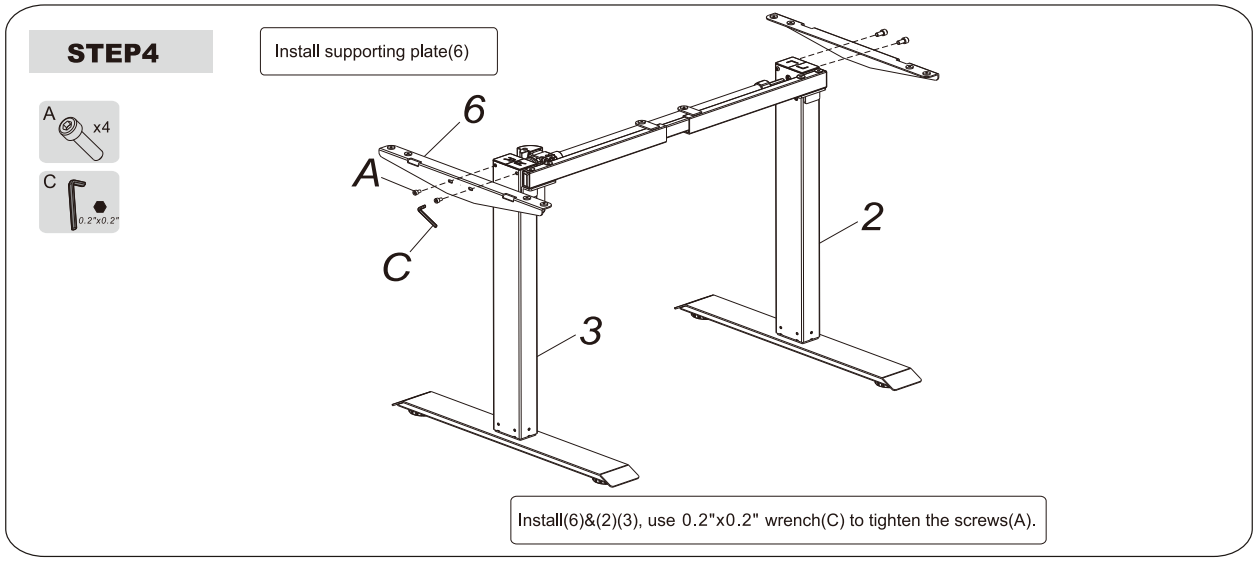

Step 5: Installing the Power Adaptor and Desktop

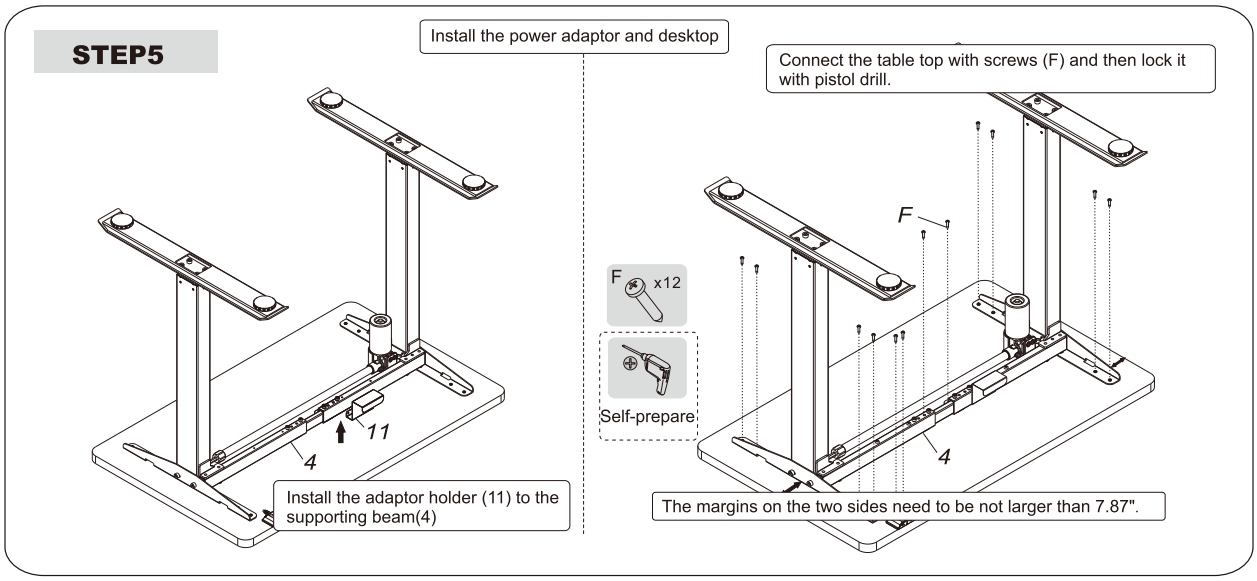

Step 6: Installing the Baffle and Power Adaptor

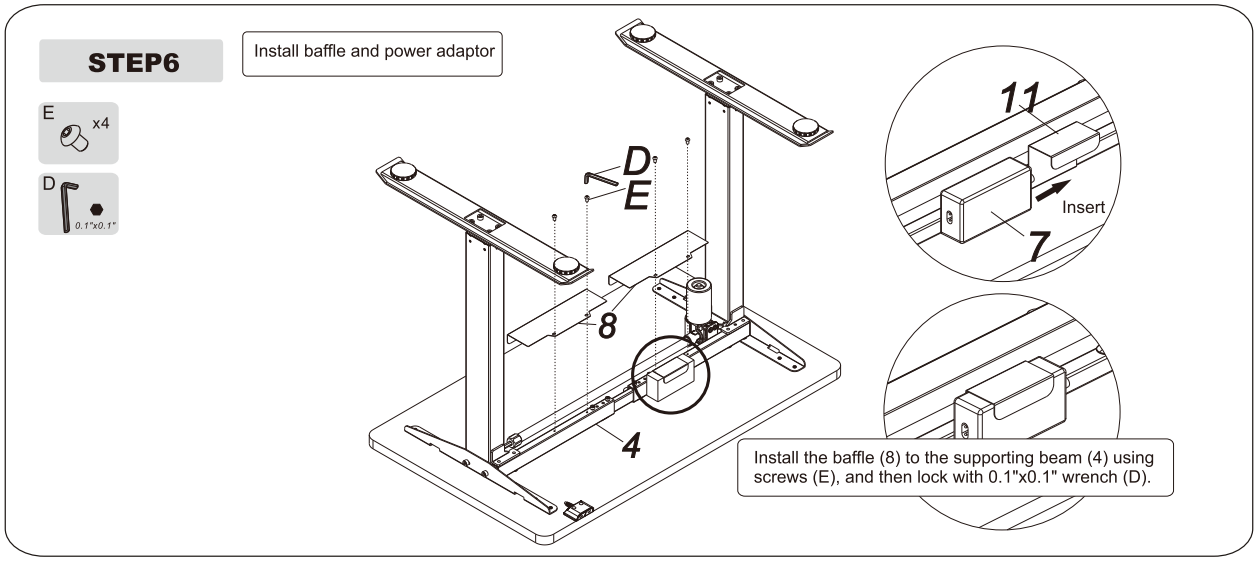

Step 7: Connecting all Cables to the Adaptor

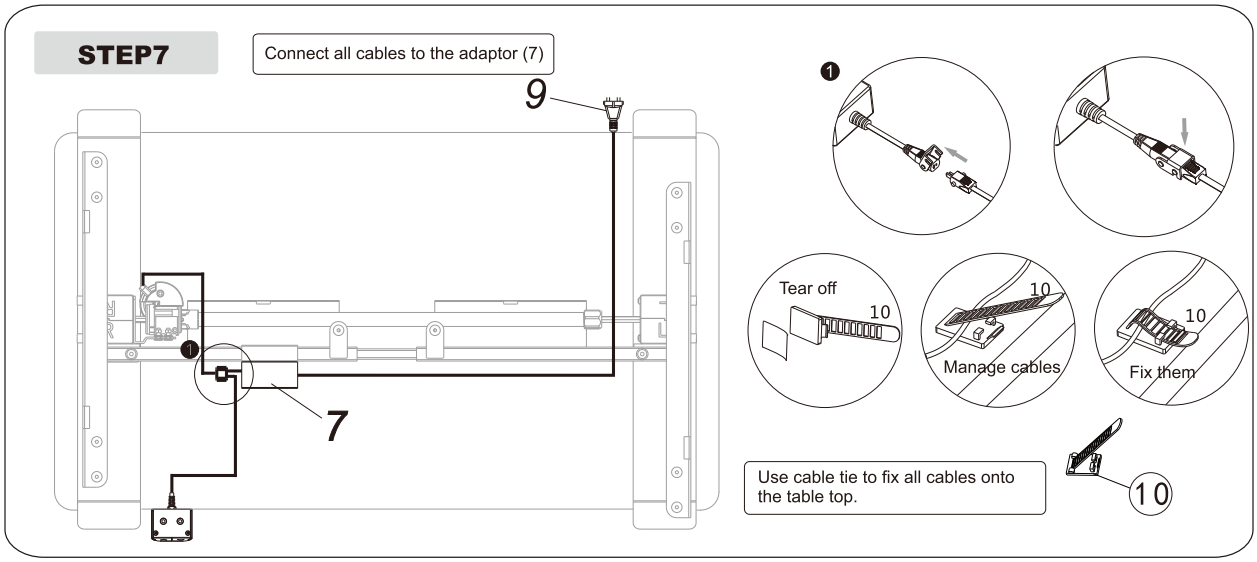

Using the Hand Switch

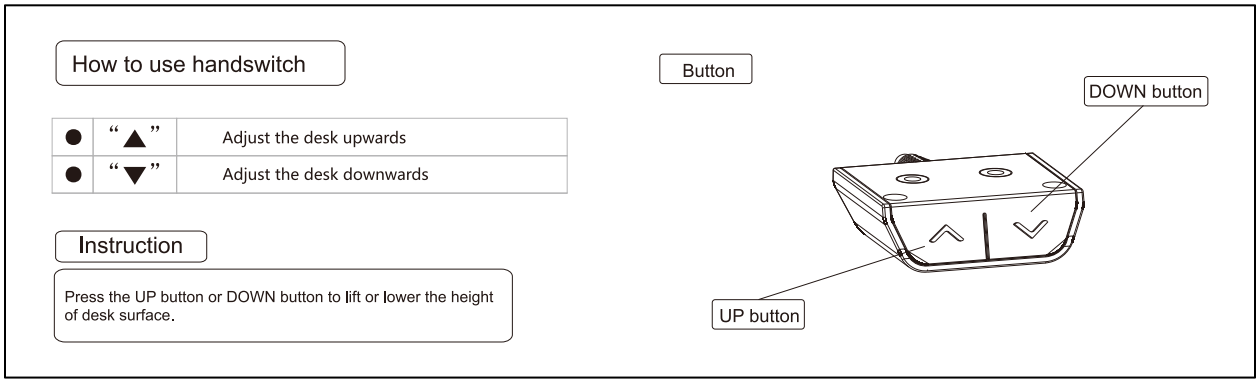

Troubleshooting

- Table does not adjust up or down when pressing and holding the directional arrow.
  - Check if all the cables are connected
- Bench does not rise up or rises up slowly when pressing and holding the up directional arrow.
  - Check if the load is too heavy – should not exceed 150 lbs.
- Frequent repositioning can cause desk to overwork and slow speed.
  - Discontinue power and wait 30 mins before reconnecting to power.
- If the above processes do not work, please contact customer service at 877-397-5144.

This page left intentionally blank

Office Furniture Warranty

2-Year Limited Warranty Program

For a period of two (2) years after purchase, XLS Products, Inc. ("Manufacturer") will either repair or replace defective components in accordance with this Limited Warranty. This warranty is between Manufacturer and the original purchaser and is valid only when accompanied by the original purchaser's sales receipt showing original date of purchase and location of purchase. Replacements under this warranty revert back to the date of original purchase for future warranty.

Manufacturer or its authorized dealer can accept or reject warranty claims based on its findings. This warranty applies in normal office use only and is not intended for industrial or public use. Manufacturer can make substitutions as required of materials, components, and sub-components of comparable value and utility. This warranty is limited to product repair or replacement (to be determined solely by Manufacturer). Warranty replacement is limited to only the single affected component.

This warranty covers only manufacturing defects and does not cover normal wear and tear, abuse or misuse, exposure to extreme heat or cold, abrasion or excessive weight. This product is intended to be used in standard installations only. This warranty is invalid if the product is not used for intended purpose. Manufacturer disclaims liability for any aspect of installation and any inconvenience caused by a defective part of a component.

Certain items are not covered by this warranty. These include, but are not limited to the following:

1. Components subjected to abuse, including abuse intended to simulate failure.
2. Damages caused by retailer, shipper or installation crew (such as scratches, dents, tears, chips, etc.).
3. Any part which merely exhibits normal wear yet functions essentially as new, including chips, scratches or stretching of materials and stitching.
4. Tears, punctures, scratches or any damage caused by improper installation or use.
5. Damage to frames/welds resulting from improper assembly is not covered. General frame rusting is not covered.
6. Fading and/or discoloration of fabrics resulting from exposure to the elements, chemicals, oils, fluids or any other cause are not covered.

To make a claim, call the toll-free number below. Please have available a copy of the original sales receipt along with a brief description of the problem. Please also provide your email address and daytime telephone or cell phone #. All items may be charged actual freight costs plus $15 for handling. Repairs or replacement will be made at the Manufacturer's option. ***Sales and use taxes, plus shipping and handling charges are the responsibility of the consumer.***

THIS IS THE ENTIRE EXCLUSIVE EXPRESS LIMITED LIABILITY. THE MANUFACTURER NEITHER MAKES NOR IS RESPONSIBLE FOR ANY OTHER WARRANTIES, EITHER EXPRESS OR IMPLIED, INCLUDING THOSE OF RETAILING DEALERS. THIS EXCLUSIVE REMEDY IS LIMITED TO RECEIPT OF A CREDIT IN CONNECTION WITH THE REPAIR OR REPLACEMENT OF ANY PRODUCT OR COMPONENT DEEMED TO BE DEFECTIVE UNDER THE TERMS AND CONDITIONS AS STATED IN THIS WARRANTY. NEITHER XLS PRODUCTS, INC., THE PRODUCT MANUFACTURER NOR ITS AGENTS SHALL BE LIABLE IN ANY CASE FOR INCIDENTAL, INDIRECT, SPECIAL OR CONSEQUENTIAL DAMAGES RESULTING FROM THE USE OF THIS PRODUCT OR ARISING OUT OF ANY BREACH OF THIS WARRANTY OR NEGLIGENCE EVEN IF IT HAS BEEN ADVISED OF THE POSSIBILITY OF SUCH DAMAGES. EXCEPT AS OTHERWISE MAY BE REQUIRED BY LAW, THERE ARE NO OTHER EXPRESS OR IMPLIED WARRANTIES OTHER THAN THE WARRANTY DESCRIBED HEREIN, AND ALL OTHER WARRANTIES, INCLUDING ANY IMPLIED WARRANTY OF MERCHANTABILITY OR FITNESS FOR A PARTICULAR PURPOSE ARE EXPRESSLY DISCLAIMED.

Contact Warranty Services at: ContactUs@Hanover-Products.com
1-877-397-5144