POWER

TEMPEST I

PRO-STYLE
UNDER-CABINET

A streamlined under-cabinet pro-style range hood, Tempest I combines power, efficiency and flexibility. 650-CFM or optional 1,200-CFM blower options and high-airflow pro baffle filters (that are dishwasher-safe) ensure a lifetime of exceptional performance. Additional options like a wireless remote control and recirculation kits for kitchens that require ductless venting ensure all you have to think about is cooking.

ZEPHYR
ZEPHYRONLINE.COM

ACT™

	INTERNAL BLOWER STANDARD	INTERNAL BLOWER with ACT™ AIRFLOW CONTROL TECHNOLOGY™*	
Single Blower (Included) Min. - Max. CFM	200 - 650	200 - 390	200 - 290
Single Blower (Included) Min. - Max. Sones	1 - 6	1 - 4	1 - 3
*Dual Blower (Optional) Min. - Max. CFM	400 - 1,200		
*Dual Blower (Optional) Min. - Max. Sones	3.5 - 9		

*Dual blower only compatible with 36" and 42" models

*AIRFLOW CONTROL TECHNOLOGY™ (ACT™) is an exclusive feature built into specific Zephyr hoods which can limit the maximum blower CFM to meet local code requirements.

Optional Wireless Remote Control

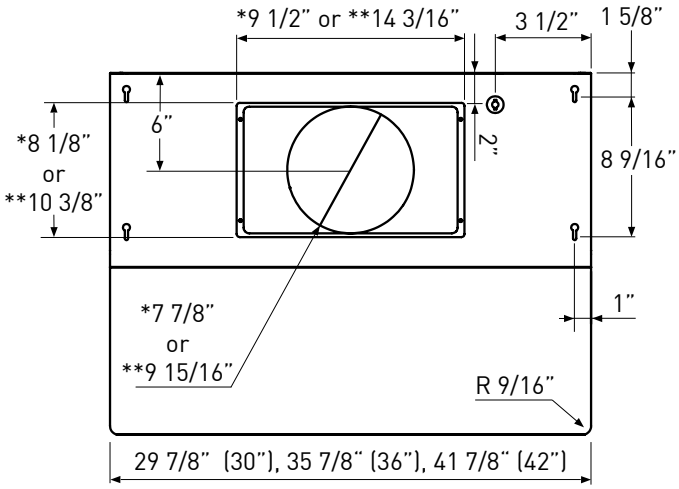

TOP

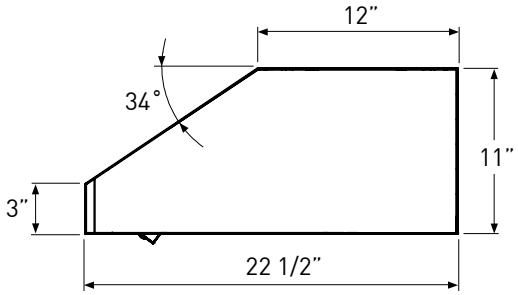

SIDE

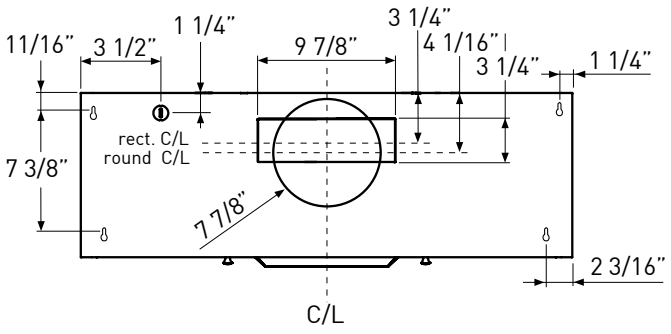

BACK

* Single Blower Dimension
** Dual Blower Dimension

ZEPHYR

ZEPHYRONLINE.COM

MODEL			
Stainless Steel	AK7000BS	AK7036BS	AK7042BS
Size	30″	36″	42″
PERFORMANCE			
Included Single Blower	200-650 CFM, 1-6 sones	200-650 CFM, 1-6 sones	200-650 CFM, 1-6 sones
ACT 390*	200-390 CFM, 1-4 sones	200-390 CFM, 1-4 sones	200-390 CFM, 1-4 sones
ACT 290*	200-290 CFM, 1-3 sones	200-290 CFM, 1-3 sones	200-290 CFM, 1-3 sones
Optional Dual Blower	NA	400-1,200 CFM, 3.5-9 sones	400-1,200 CFM, 3.5-9 sones
FEATURES			
ACT™ Technology	Yes	Yes	Yes
Controls	Electronic Touch	Electronic Touch	Electronic Touch
Speed Levels	6**	6**	6**
Auto Delay-Off	Yes	Yes	Yes
CleanAir Function	Yes	Yes	Yes
Lighting	Halogen, 35W x2	Halogen, 35W x2	Halogen, 35W x2
Dual-Level Lighting	Yes	Yes	Yes
Filters	Pro Baffle x2	Pro Baffle x3	Pro Baffle x3
Wireless Remote Control Option	Yes, RF	Yes, RF	Yes, RF
Dual Internal Blower Option	No	Yes	Yes
Recirculating Option***	Yes, Single Blower Only	Yes, Single Blower Only	Yes, Single Blower Only
DUCT SPECIFICATIONS			
Vertical Single Internal Blower	8″ Round	8″ Round	8″ Round
Horizontal Single Internal Blower†	3-1/4″ x 10″ or 8″ Round	3-1/4″ x 10″ or 8″ Round	3-1/4″ x 10″ or 8″ Round
Vertical Dual Internal Blower	NA	10″ Round	10″ Round
Horizontal Dual Internal Blower	NA	NA	NA
AC POWER (Single Blower)	120V, 60Hz at Max. 5A	120V, 60Hz at Max. 5A	120V, 60Hz at Max. 5A
AC POWER (Dual Blower)	120V, 60Hz at Max. 9A	120V, 60Hz at Max. 9A	120V, 60Hz at Max. 9A
OPTIONAL ACCESSORIES			
12″ Duct Cover	AK0720	AK0726	AK0722
Wireless Remote Control	14000005	14000005	14000005
Dual Internal Blower Kit	PBD-1200A	PBD-1200A	PBD-1200A
Recirculating Kit	ZRC-7000B	ZRC-7036B	ZRC-7042B
Backsplash with Shelves	AK0710	AK0716	AK0712
Make-Up Air Kit (Single Blower)	MUA008A	MUA008A	MUA008A
Make-Up Air Kit (Dual Blower)	NA	MUA010A	MUA010A
MOUNTING HEIGHT RANGE††	26″ - 36″	26″ - 36″	26″ - 36″
WARRANTY	3 years parts, 1 year labor	3 years parts, 1 year labor	3 years parts, 1 year labor

*ACT™ only available with single internal blower.
**When ACT™ is enabled the maximum speed levels will change. ACT 390 CFM = 3 speeds and ACT 290 CFM = 2 speeds.
***Recirculating kit includes a return-air box which adds an additional 4″ to the hood height. Recirculating kit is only compatible with single blower.
†If horizontally ducting via 3-1/4″ x 10″, the maximum airflow of 650 CFM will be reduced to 550 CFM.
††Mounting height refers to distance between top of a 36″ tall cooking surface and bottom of hood.

ACT™ AIRFLOW CONTROL TECHNOLOGY™ (ACT™) is an exclusive feature built into specific Zephyr hoods which can limit the maximum blower CFM to meet local code requirements.

Specifications subject to change, check zephyronline.com for up-to-date information.
Zephyr Ventilation | 2277 Harbor Bay Parkway, Alameda, CA 94502 | 888.880.VENT
NOV15.0301

c UL us